ESTHETICA
Medical Furniture

MRIDUL DERMA CHAIR

4 MOTOR MODEL

The Mridul Derma Chair by Esthetica is a professional dermatology chair designed to elevate clinical efficiency and patient comfort. It features a five-piece fully articulated top for superior positioning and versatility. Electrically adjustable height, backrest, leg rest, and tilt functions allow precise control during procedures. Detachable armrests, headrest, and foot section provide added flexibility, making it ideal for modern dermatology and aesthetic practices seeking reliability and advanced functionality.



KEY FEATURES

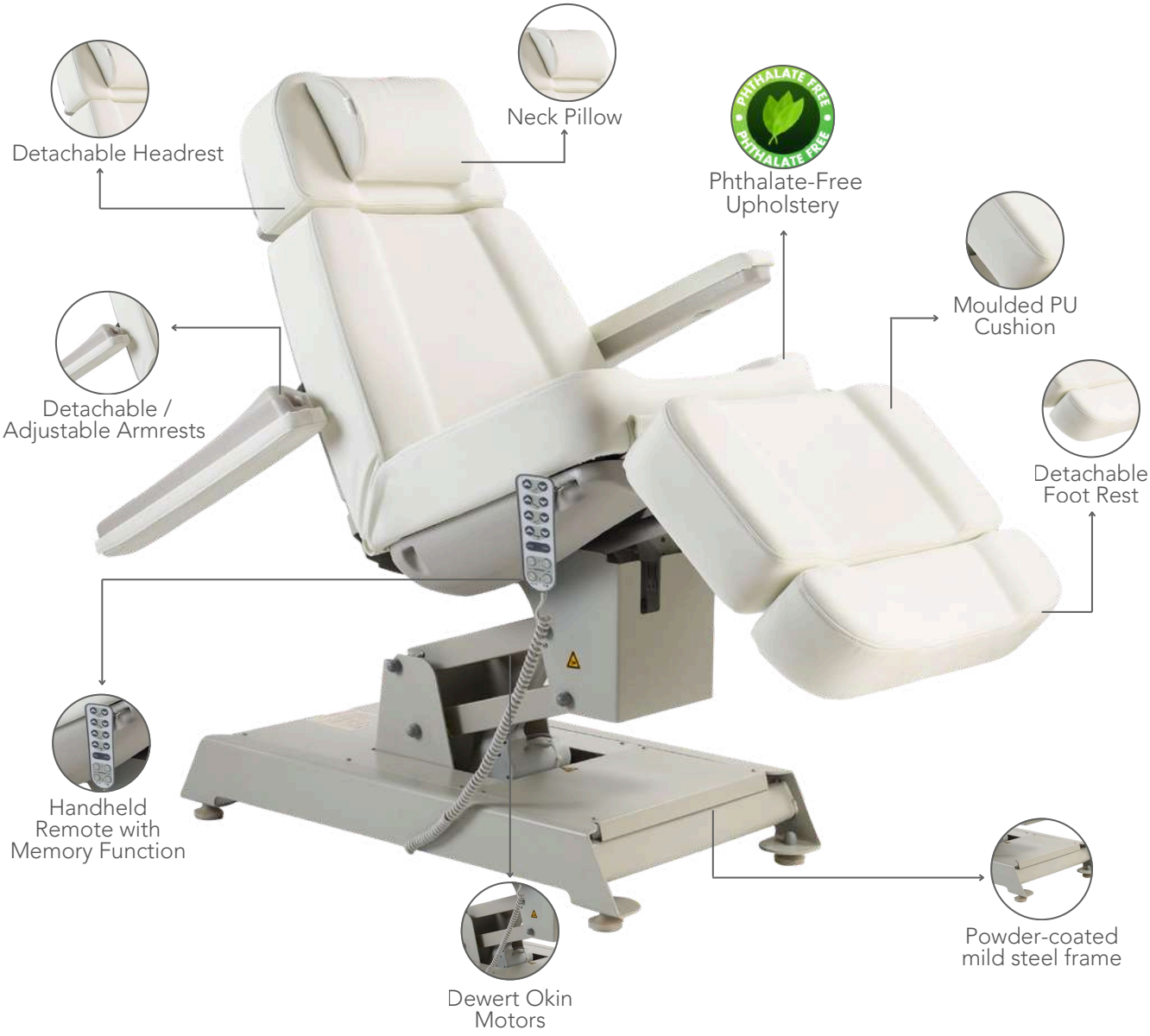

Tilt Function

Mridul Derma Chair's tilt function allows the seat and backrest to move simultaneously, enabling patients to recline comfortably without back pressure—ideal for long treatments while maintaining a stable, ergonomic position.

Detachable Design

This dermatology chair features removable headrest, leg rest, and armrests, enabling flexible configurations to support diverse treatments, including trichology, foot care, and various skin procedures with enhanced convenience and adaptability.

Programmable Handset

The Mridul Derma Chair's programmable handset stores three doctor-defined positions. With one touch, the chair returns to a saved setting, saving time and allowing positions to be recalled repeatedly during procedures.



Phthalate-Free Upholstery

Phthalate-Free Upholstery is designed for hospital environments, offering a safer surface for patients and healthcare workers. It resists stains and disinfectants, withstands frequent cleaning, and ensures durable, fire- and abrasion-resistant performance.

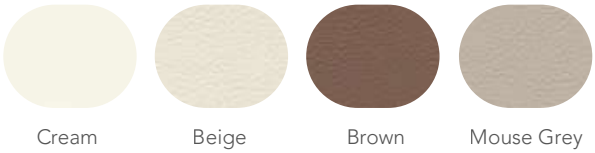

FEATURES

Armrests	Detachable and Adjustable armrests with forward–backward and up–down movement
Backrest	Electronically Adjustable
Headrest	Detachable Headrest for flexible treatment
Legrest	Electronically Adjustable
Foot Rest	Detachable Foot Rest
Height	Electronically Adjustable
Trendelenburg	Electronically Adjustable
Foam Cushion	75 mm mixed layer for comfortable seating
Programable Handset	

TECHNICAL SPECIFICATIONS

Length	1880 mm / 74 in
Width without side armrests	630 mm / 24.8 in
Width with side armrests	840 mm / 33 in
Minimum height	630 mm / 24.8 in
Maximum height	850 mm / 33.46 in
Tilt Angle	-20°

ELECTRICAL PARAMETERS

Power in (Mains Power Supply)	100-240 V, 50-60HZ, 1.5 A
IPX Rating	IPX 6
Operating Temperature	10–40°C
Shock Protection	Class I

BASE & FRAME

Base	Powder-coated mild steel frame
Safe Working Load	180 kgs
Patient Load Bearing capacity	150 kgs

CERTIFICATIONS & STANDARDS

Quality management	ISO 13485:2016 certified manufacturer (MTIC)
General safety for medical electrical equipment	IEC 60601-1
EMI/EMC	IEC 60601-1-2

UPHOLSTERY

Type	Phthalate-Free Upholstery
Thickness	1.01 mm
Tensile Strength	ISO 1421, 804 N/ 5 cm
Colour Options	Cream, Beige, Brown, Mouse Grey
Weight	732 g / sqmt
Abrasion	ISO 5470-2 = 2,00,000 cycles / min

WARRANTY

3 years on motors

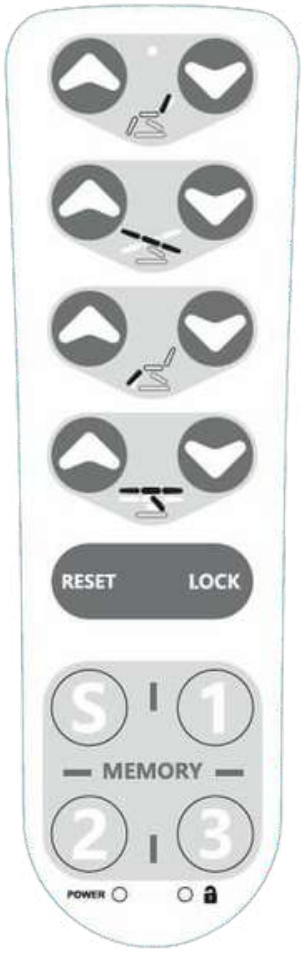

HANDSET

TECHNICAL DRAWINGS

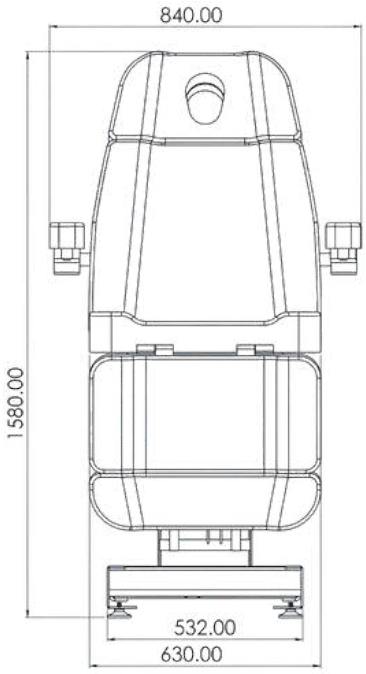

FRONT VIEW

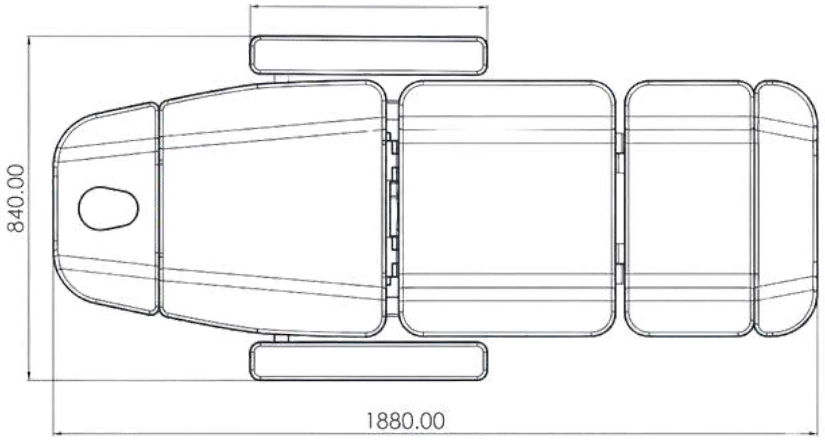

TOP VIEW

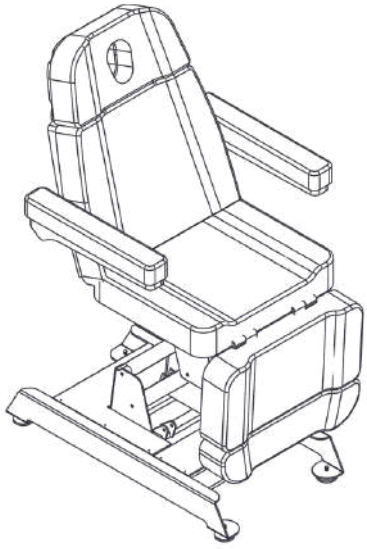

ISOMETRIC VIEW

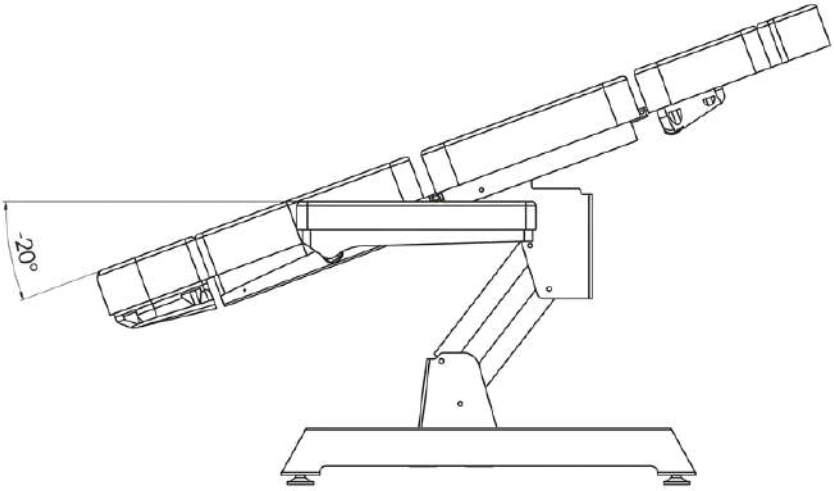

TRENDELENBURG

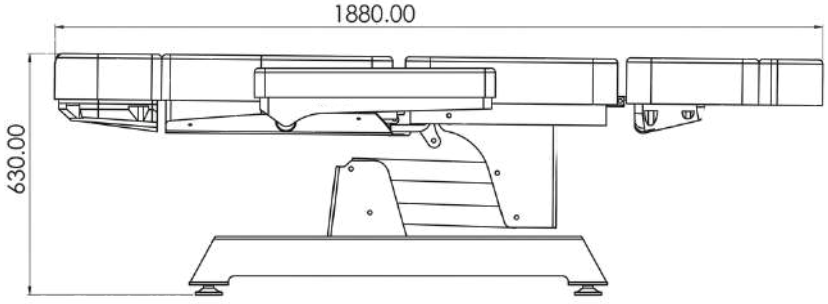

MINIMUM HEIGHT

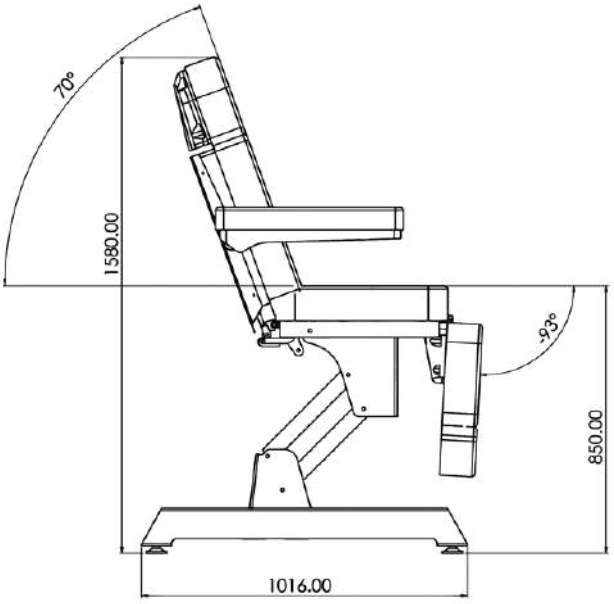

MAXIMUM HEIGHT

ALL DIMENSIONS ARE IN MM