ESTHETICA
Medical Furniture

# ARCA

## DERMATOLOGY CHAIR
## TWO MOTORS, FOUR FUNCTIONS

The Arca is Esthetica Medical's electronic dermatology chair — designed to support advanced skin treatments, aesthetic procedures, and extended clinical consultations. Two quiet motors provide seamless electronic adjustment of height and backrest, while a manually adjustable legrest and tilt function add the versatility required across a wide range of dermatology and aesthetic treatment protocols. The ergonomic tilt feature reduces patient strain during extended sessions, and a handheld remote allows practitioners precise, effortless positional control throughout. A detachable headrest with nose slot and armrests complete a chair that is as considered in its clinical functionality as it is in its build — making it a practical, cost-effective solution for modern dermatology clinics and aesthetic centres.



# KEY FEATURES

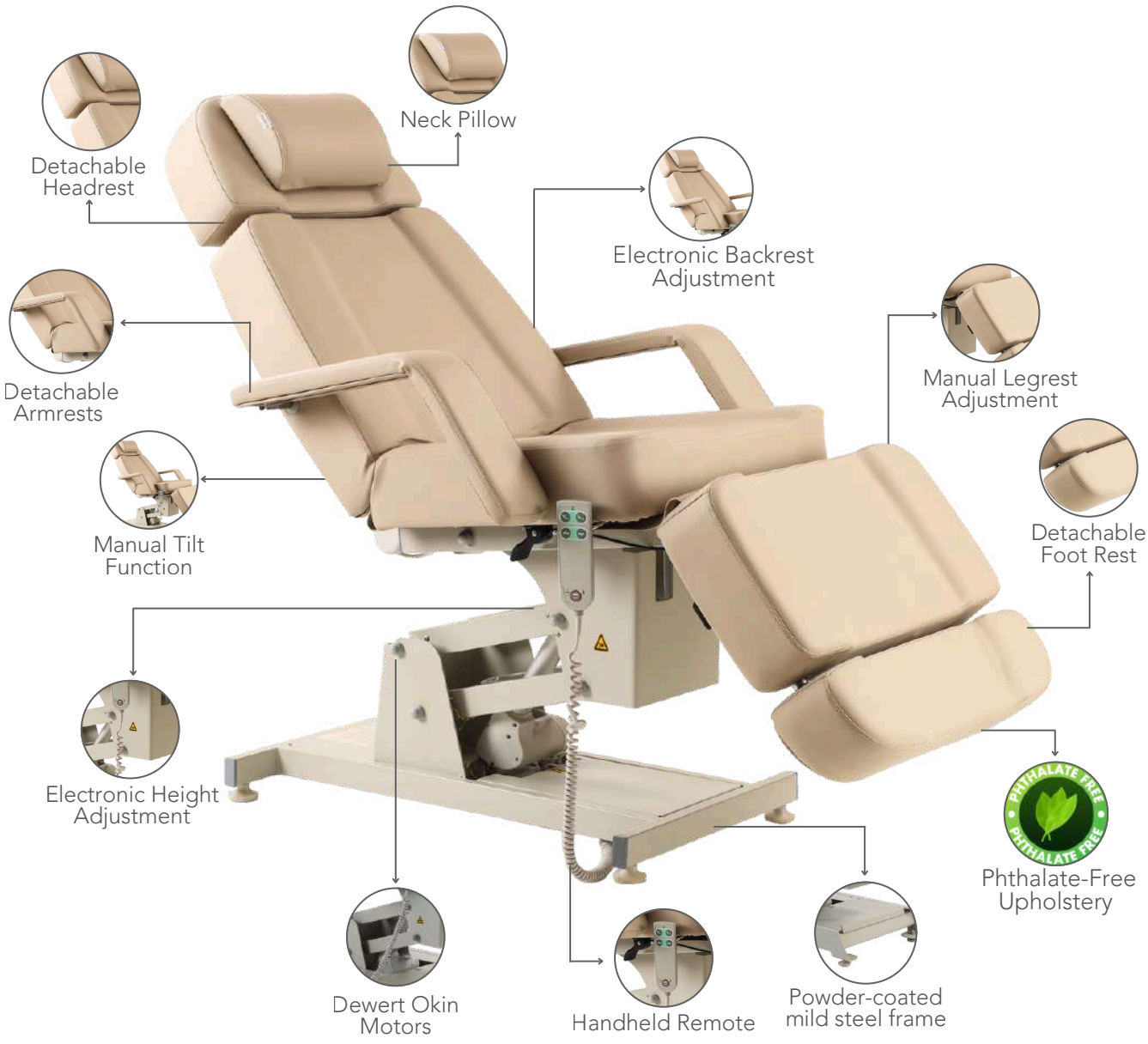


### Electronic Height & Backrest Adjustment

Two quiet motors drive independent electronic height and backrest adjustment — giving practitioners smooth, precise control over patient positioning across every treatment from initial consultation to extended procedures.

### Manual Legrest & Tilt Function

The manually adjustable legrest provides flexible lower body positioning, while the manual tilt function allows the chair surface to be angled — reducing patient strain during long sessions and supporting a wider range of clinical treatment protocols.

### Phthalate-Free Upholstery

The Arca is upholstered in phthalate-free fabric designed for clinical environments — safe, durable, and built for the demands of daily professional use, with antibacterial, fire retardant, and stain resistant properties as standard.

### Handheld Remote Control

A dedicated handheld remote puts complete positional control at the practitioner's fingertips — allowing precise, effortless adjustments without interrupting the treatment or requiring the patient to reposition manually.



## FEATURES

| | |
|---|---|
| Backrest | Electronically Adjustable |
| Headrest | Detachable Headrest with Nose Slot |
| Armrest | Detachable Armrest |
| Legrest | Manually Adjustable |
| Foot Rest | Detachable Foot Rest |
| Height | Electronically Adjustable |
| Tilt | Manually Adjustable |
| Foam Cushion | 75 mm mixed layer for comfortable seating |

## TECHNICAL SPECIFICATIONS

| | |
|---|---|
| Length | 1880 mm / 74 in |
| Width | 630 mm / 24.8 in |
| Minimum height | 615 mm / 24.2 in |
| Maximum height | 1565 mm / 61.6 in |

## ELECTRICAL PARAMETERS

| | |
|---|---|
| Power in (Mains Power Supply) | 100-240 V, 50-60HZ, 1.5 A |
| IPX Rating | IPX 6 |
| Operating Temperature | 10–40°C |
| Shock Protection | Class I |

## BASE & FRAME

| | |
|---|---|
| Base | Powder-coated mild steel frame |
| Safe Working Load | 180 kgs |
| Patient Load Bearing capacity | 150 kgs |

## CERTIFICATIONS & STANDARDS

| | |
|---|---|
| Quality management | ISO 13485:2016 certified manufacturer (MTIC) |
| General safety for medical electrical equipment | IEC 60601-1 |
| EMI/EMC | IEC 60601-1-2 |

## UPHOLSTERY

| | |
|---|---|
| Type | Phthalate-Free Upholstery |
| Thickness | 1.01 mm |
| Tensile Strength | ISO 1421, 804 N/ 5 cm |
| Colour Options | Cream, Beige, Brown, Mouse Grey |
| Weight | 732 g / sqmt |
| Abrasion | ISO 5470-2 = 2,00,000 cycles / min |

## WARRANTY

3 years on motors




HANDSET

# TECHNICAL DRAWINGS

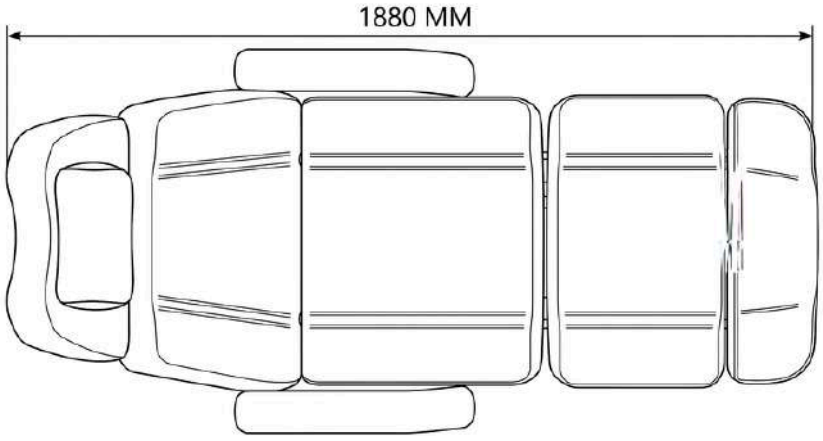


TOP VIEW



ISOMETRIC VIEW

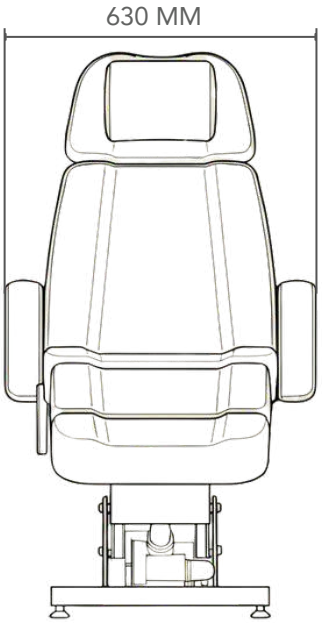


FRONT VIEW

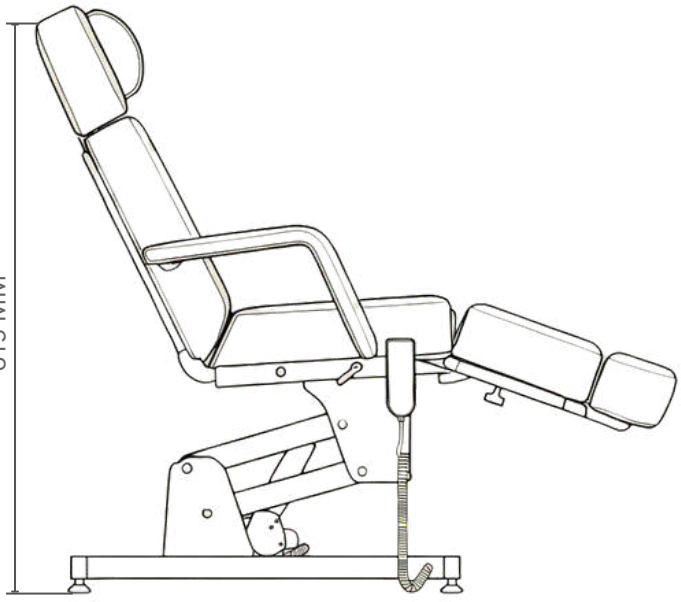


MINIMUM HEIGHT

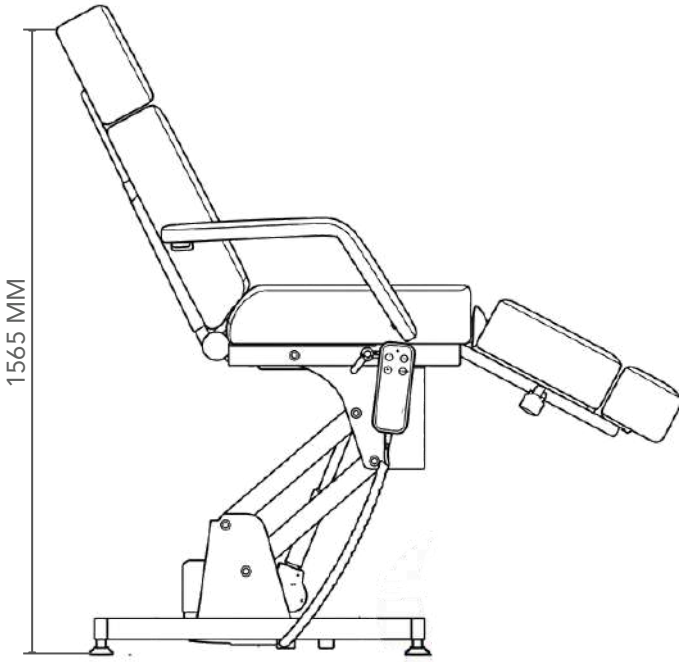


MAXIMUM HEIGHT

ALL DIMENSIONS ARE IN MM