ESTHETICA
Medical Furniture

AESTHETIC BED

The Aesthetic Bed by Esthetica is a versatile and professional treatment bed, designed to meet the needs of modern skin clinics, laser centers, and advanced spas. Combining smooth electric adjustments with ergonomic comfort, it provides therapists with precision and clients with ease and relaxation. Crafted with a durable powder-coated steel frame and upholstered in soft, skin-friendly fabric, the Aesthetic Bed blends functionality with refined aesthetics.



KEY FEATURES

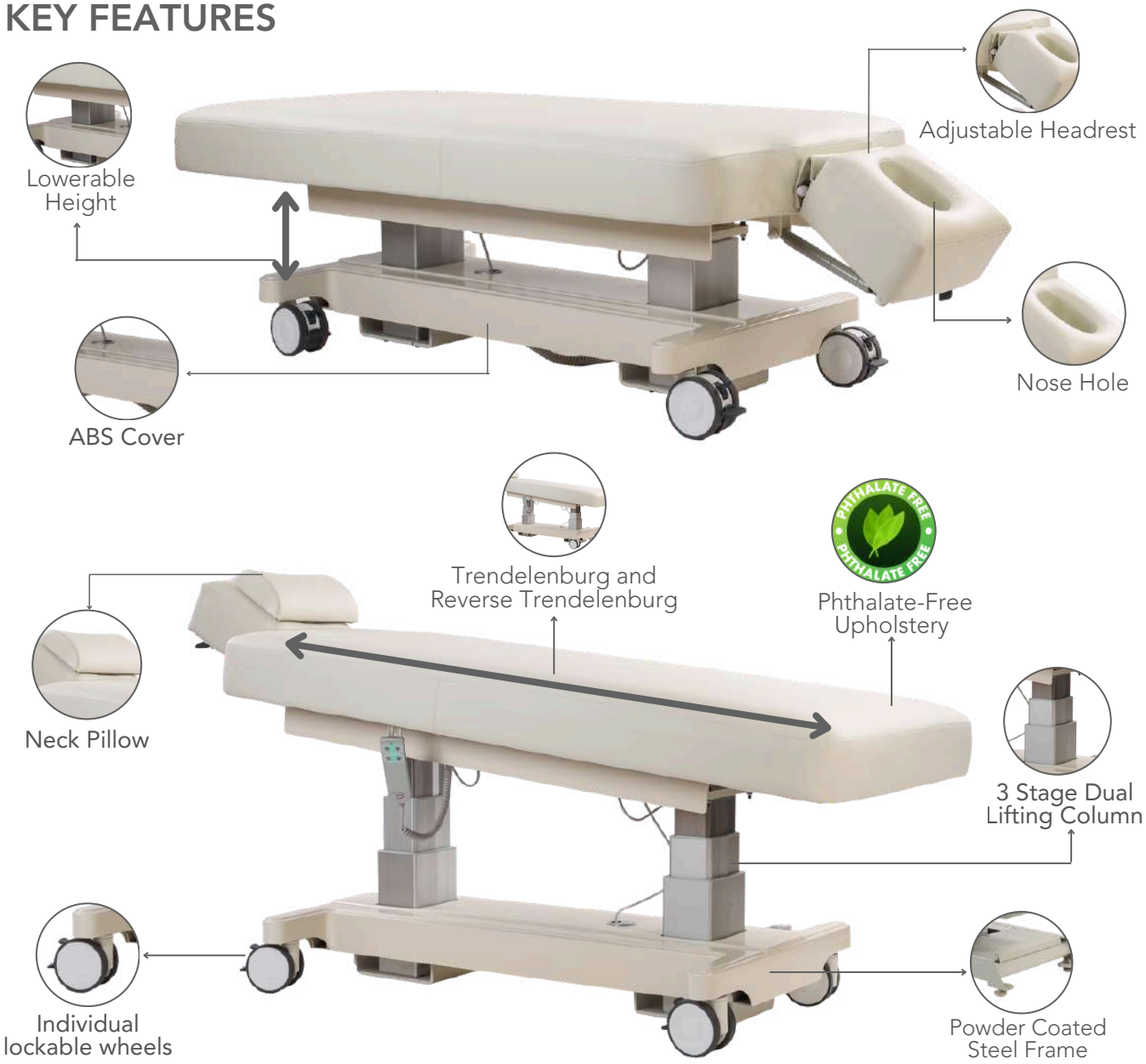

Trendelenburg Function

The Trendelenburg function tilts the bed head-down, improving facial blood circulation, enhancing treatment effectiveness, providing better practitioner access, ensuring client comfort and stability, and supporting procedures like facials and lymphatic drainage by aiding fluid movement.

Adjustable Headrest

A tilting headrest can be raised or lowered, allowing upright or flat positioning for different treatments. It improves practitioner access and precision, enhances client comfort with proper neck support, increases bed versatility, and promotes easier breathing and relaxation during aesthetic procedures.

Phthalate-Free Upholstery

Phthalate-Free Upholstery is designed for hospital environments, offering a safer surface for patients and healthcare workers. It resists stains and disinfectants, withstands frequent cleaning, and ensures durable, fire- and abrasion-resistant performance.



Easy Mobility

4-inch lockable castor wheels allow smooth movement of the aesthetic bed for easy positioning and cleaning, while locking ensures stability during treatments, enhancing safety, convenience, and flexibility in workspace arrangement without compromising client comfort or practitioner efficiency.

FEATURES

Headrest	Electronically Adjustable
Height	Manually Adjustable : +13° to -16° for treatment flexibility
Trendelenburg	Electronically Adjustable
Castors Wheels	4 x Individual lockable wheels
Reset Position	 Reset

TECHNICAL SPECIFICATIONS

Length	2030 mm / 80 in
Width	800 mm / 31.49 in
Minimum Height	610 mm / 24 in
Maximum Height	990 mm / 39 in

ELECTRICAL PARAMETERS

Power in (Mains Power Supply)	100-240 V, 50-60HZ, 1.5 A
IPX Rating	IPX 6
Operating Temperature	10–40°C
Shock Protection	Class I

BASE & FRAME

Base	Powder-coated mild steel frame
Safe Working Load	180 kgs
Patient Load Bearing capacity	150 kgs

CERTIFICATIONS & STANDARDS

Quality management	ISO 13485:2016 certified manufacturer (MTIC)

UPHOLSTERY

Type	Veridura Phthalate-Free Upholstery
Thickness	1 mm
Tensile Strength	ISO 1421, 869.22 N/ 5 cm
Colour Options	Cream, Beige, Brown, Mouse Grey
Weight	726.7 g / sqmt
Abrasion	ISO 5470-2 = 2,00,000 cycles / min

Features :



Phthalate-Free | Fire Retardant | Oil Resistant | Alcohol Resistant | Ultra Soft | Stain Resistant | Anti Bacterial | Eco-Friendly

WARRANTY

3 years on motors

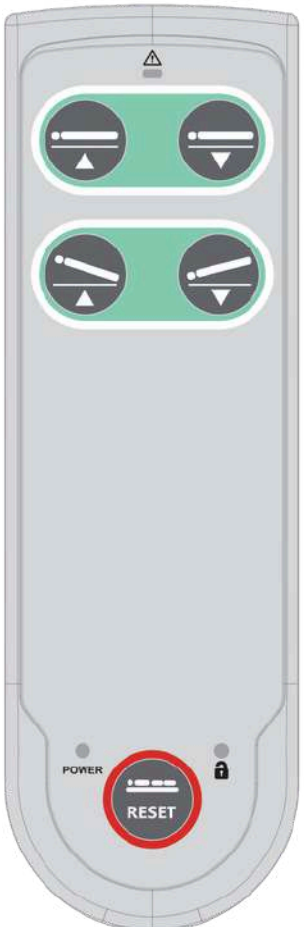

HANDSET

TECHNICAL DRAWINGS

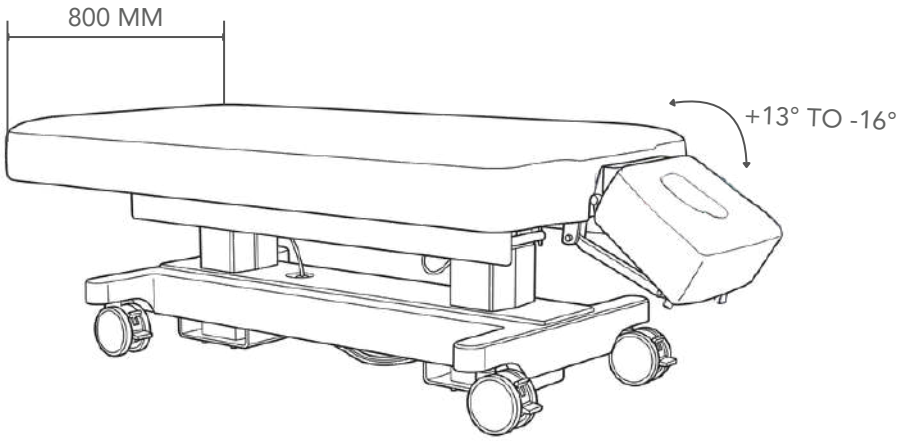

SIDE VIEW

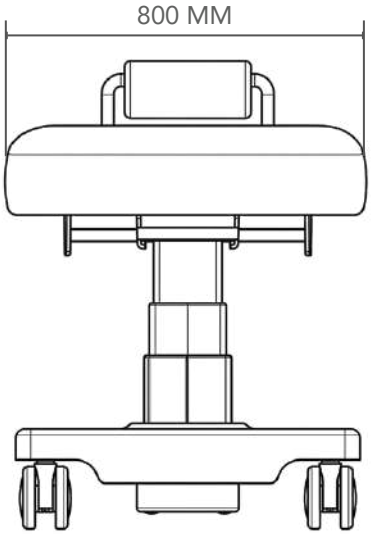

FRONT VIEW

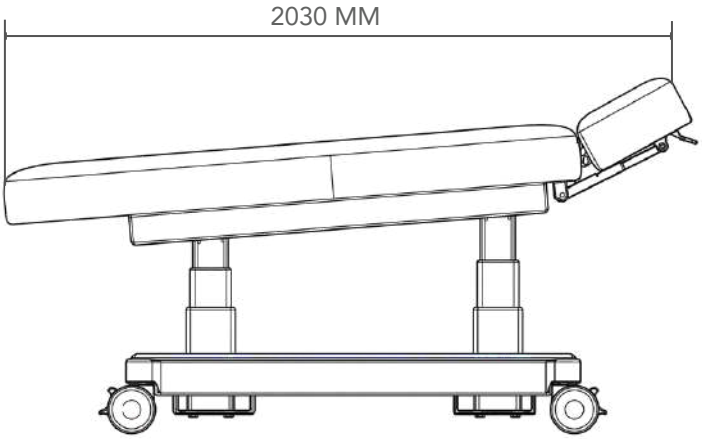

TRENDELENBURG VIEW

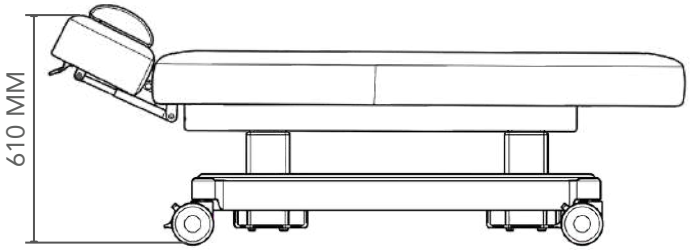

MINIMUM HEIGHT

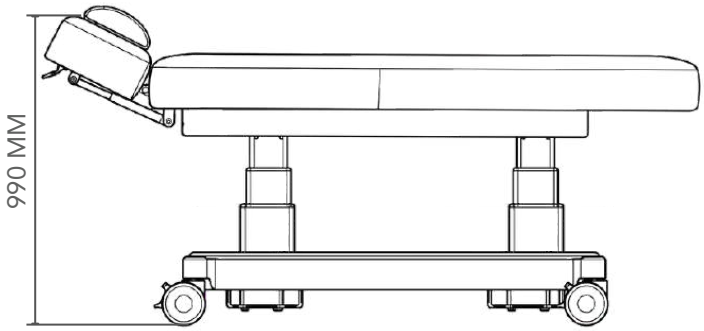

MAXIMUM HEIGHT

ALL DIMENSIONS ARE IN MM